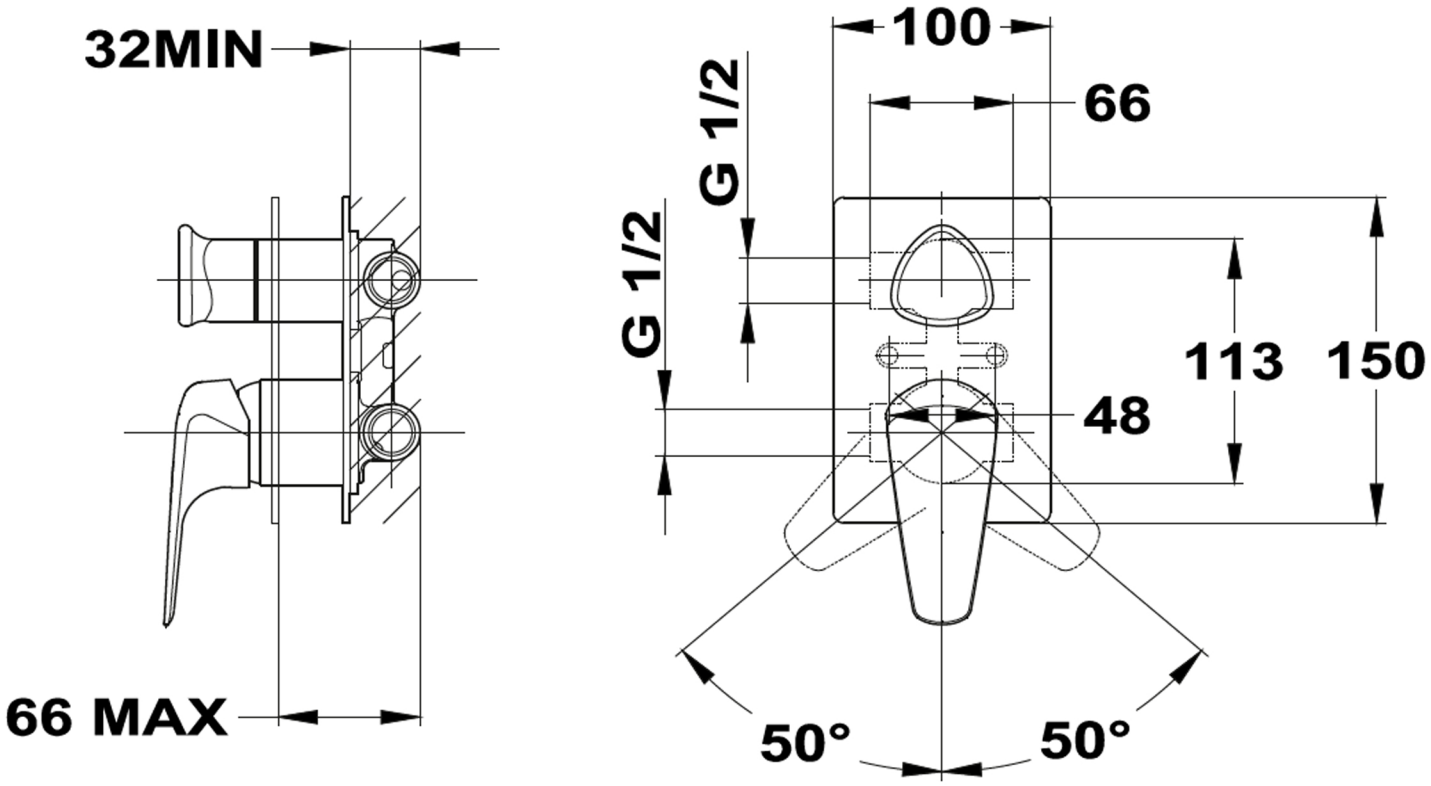
32MIN
66 MAX
100
66
G 1/2
G 1/2
48
113
150
50°
50°