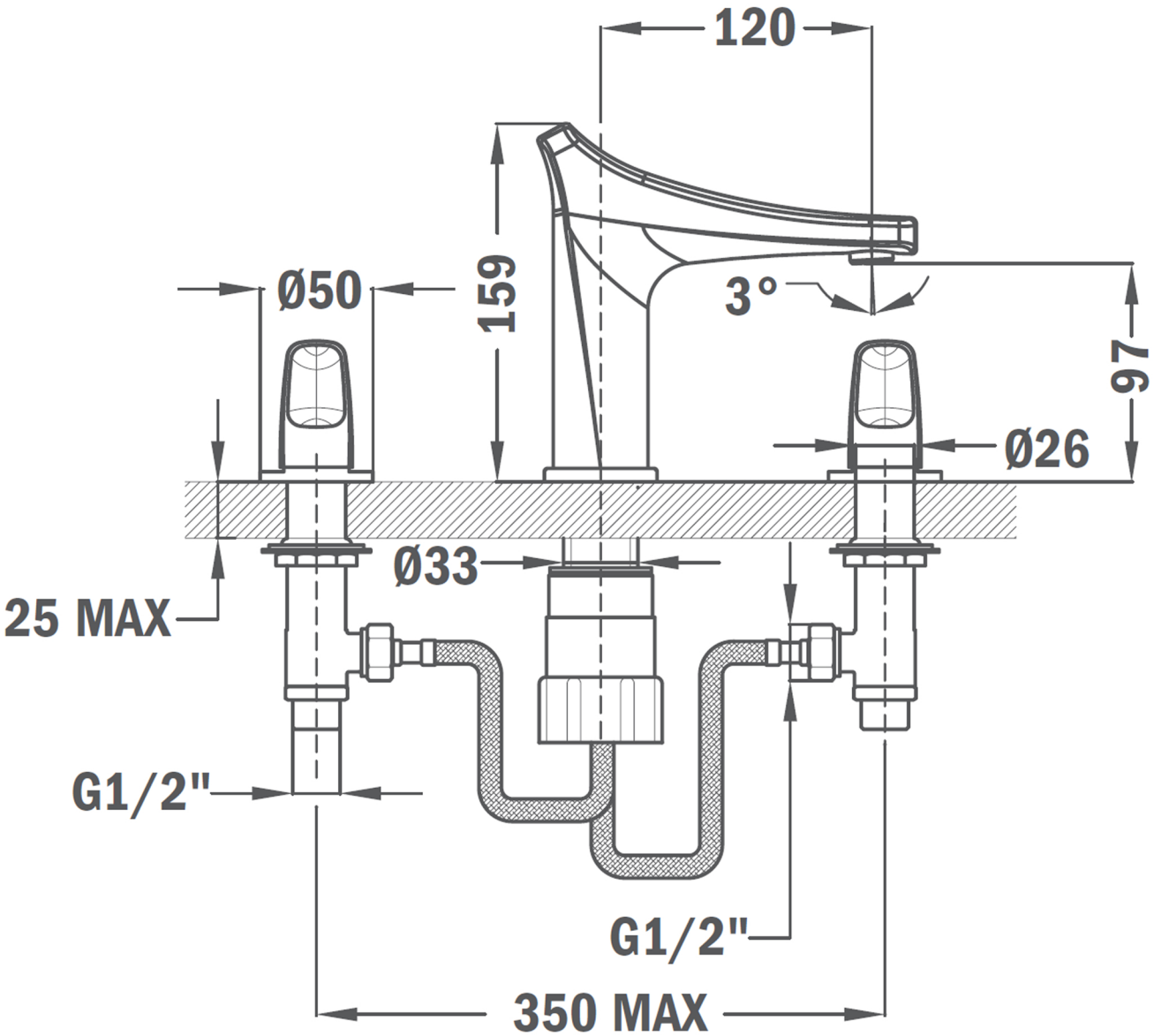
120
Ø50
159
3°
97
Ø26
Ø33
25 MAX
G1/2"
G1/2"
350 MAX