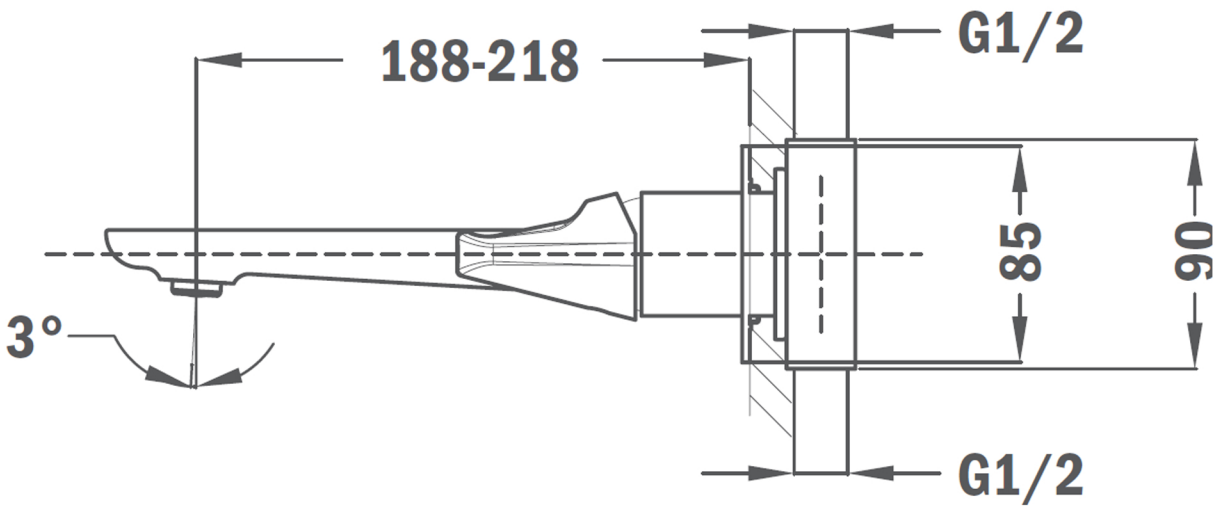
188-218
G1/2
85
90
3°
G1/2

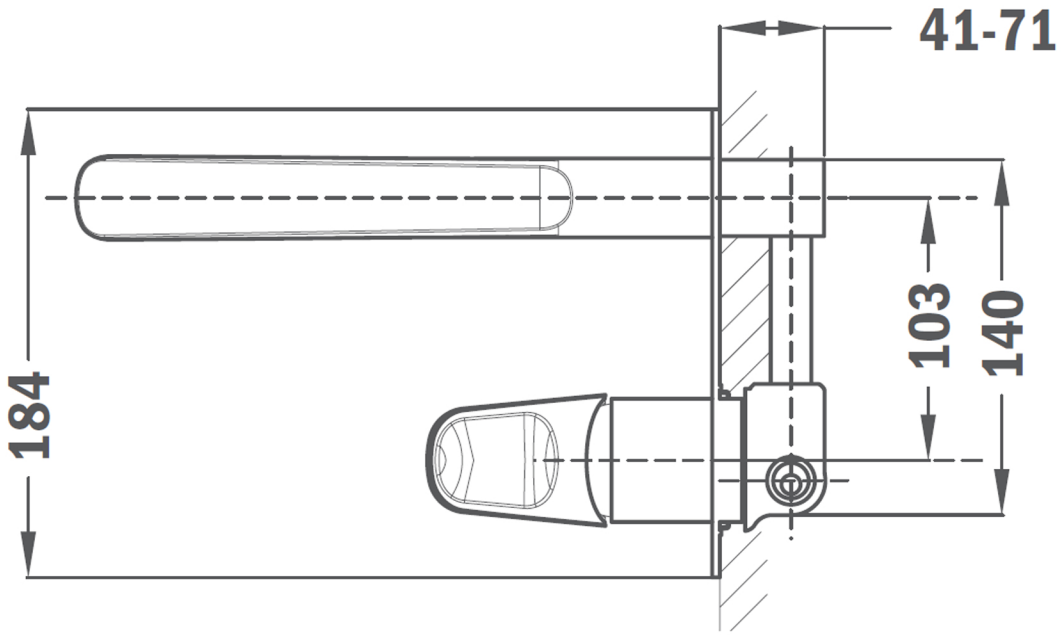
41-71
184
103
140