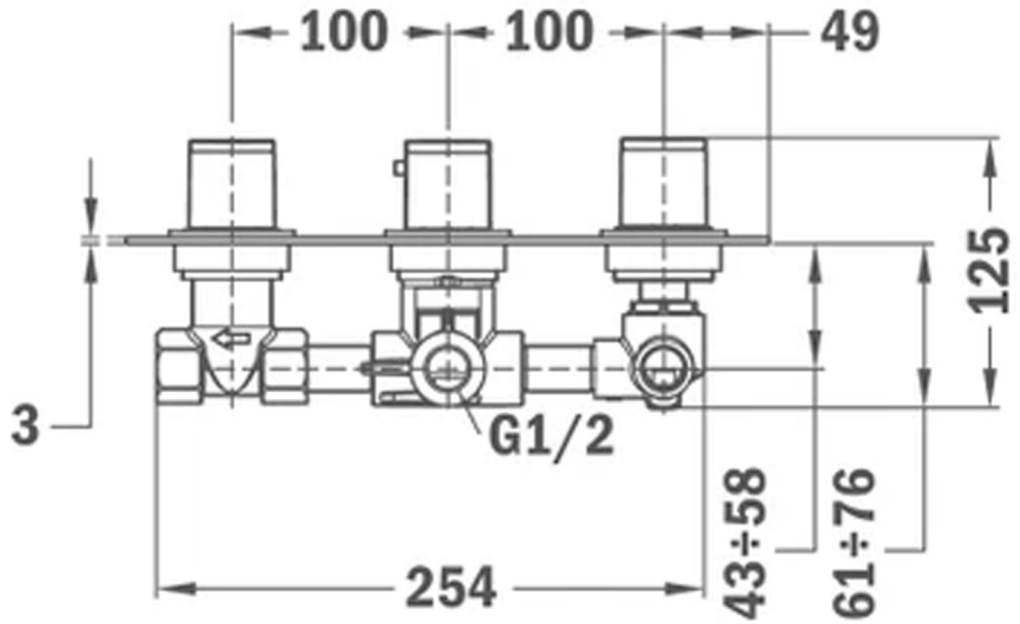
100
100
49
125
3
G1/2
43÷58
61÷76
254

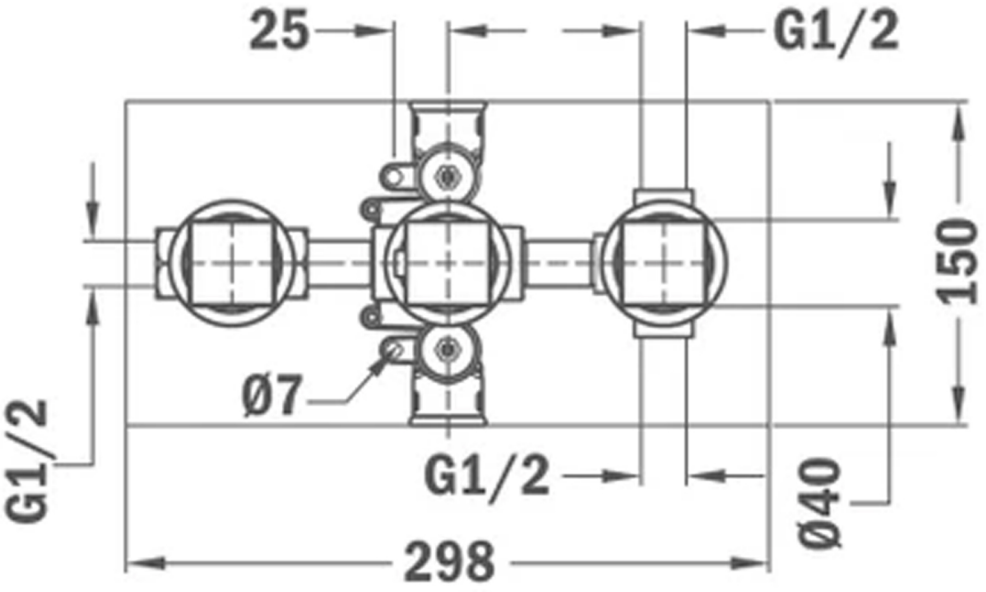
25
G1/2
150
Ø7
G1/2
G1/2
Ø40
298