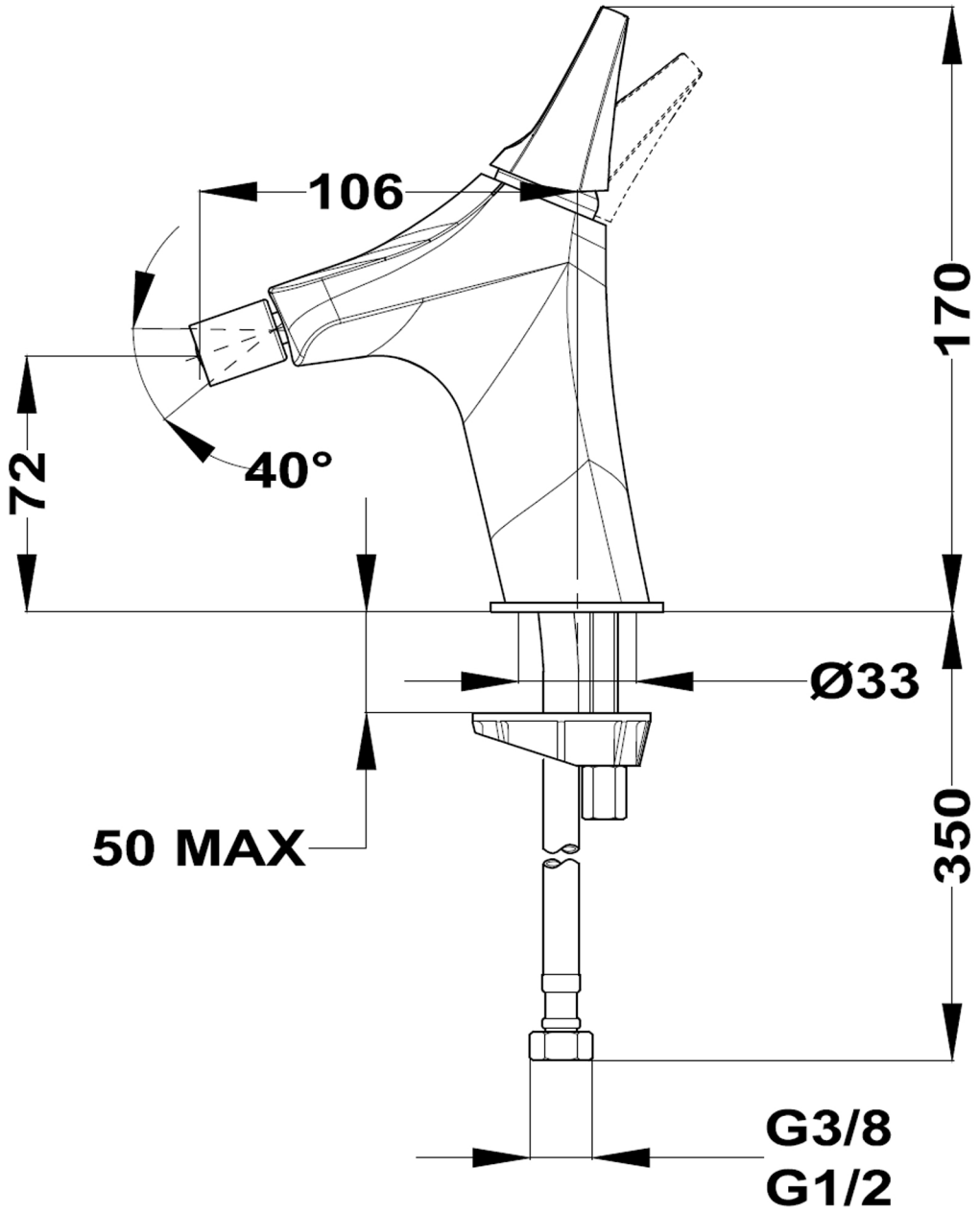
106
170
72
40°
Ø33
50 MAX
350
G3/8
G1/2